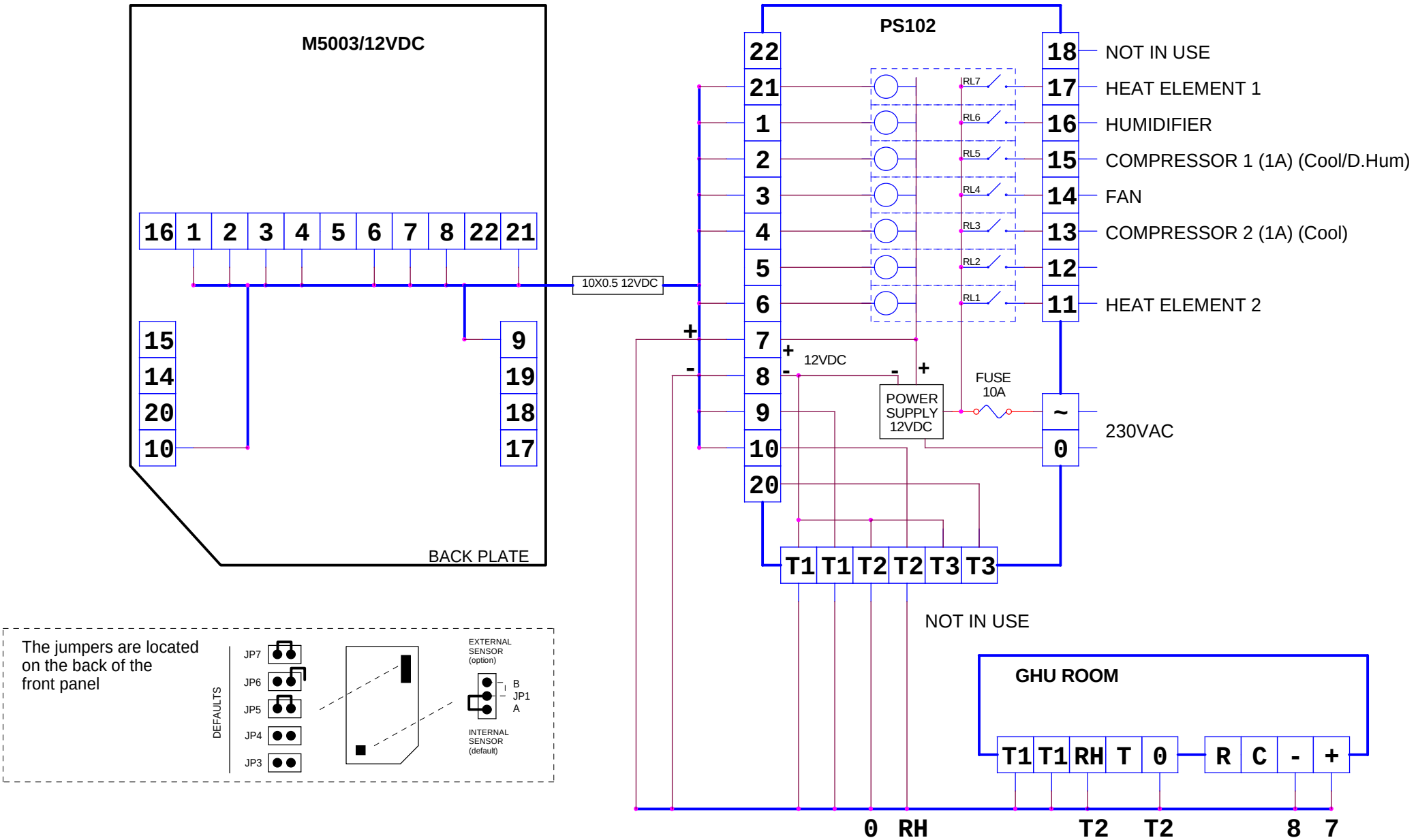

meitav-tec
Tel: 03-9626462 Fax: 03-9626620
email: support@meitavtec.com

Title: M5003/12VDC (PS102)
Date: 23/07/2009
DWG No. 15050

No.	Revision	Date

Print name: ERT2000/TOS_LIGHT
Software name: HC22P_I
Check sum: D42A
File name: M5003-12+PS102.DSN

Drawn: P.Rechtman
Checked: O.Volovich
Approved: E.Roy